MantelMount®

FITS TVs
50" TO 90"

MOUNT PATTERN
UP TO 600mm x 600mm

HEAVY DUTY STEEL
3mm

ADJUSTABLE TILT
9°

OFF-THE-WALL DISTANCE
19" MAX

SWIVEL CAPACITY
± 80°
with Included Adapter

VERTICAL DROP
27" MAX

MAX LOAD
115 lbs

New Easy Tilt & Optional Hideaway Handle

MM720 Pro Series

Pull Down TV Mount

The ALL NEW MantelMount MM720 Pro Series Pull Down TV Mount offers patent-pending, **Quick & Easy Tilt Functionality** literally at your fingertips. Simply stand in front of your TV, squeeze the handle at the bottom of the screen, push or pull to the desired tilt, and let go to lock the perfect tilt into place.

MantelMount. MM720
US. PAT. NO. 8,864,092 US. PAT. NO. 8,724,037

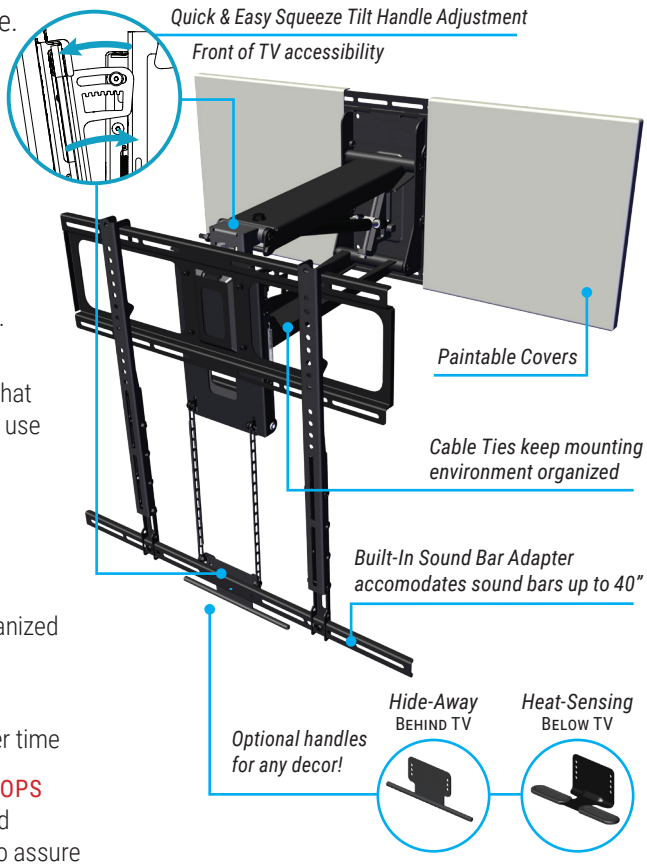

New Features

- **EASY TILT ADJUSTMENT**
  Allows for quick & easy tilt adjustment with practically one hand from in front of the mount.
- **80-DEGREE ENHANCED SWIVEL**
  The included SRE000 Adapter allows an enhanced swivel up to 80-degrees. This allows for viewing from an adjacent area.
- **MATCH ANY DECOR WITH YOUR CHOICE OF HANDLE**
  The MM720 comes with the traditional heat sensing handle that attaches below the TV as well as with a hide away handle for use from behind the TV, hidden from view.

Standard Features

- **2 AUTOMOTIVE GAS PISTONS**
  Makes TV feel feather light
- **PAINTABLE WALL COVERS**
  Conceals the TV mount's wall hardware
- **HEAT-SENSING HANDLES**
  Handles turn red if the temperature reaches 110°F
- **PATENTED AUTO-STRAIGHTENING**
  Automatically aligns TV when lifted to it's highest position
- **BUILT-IN SOUND BAR ADAPTER**
  No additional hardware required
- **CABLE MANAGEMENT**
  Tabs keep TV wires organized
- **PATENTED ENHANCED STABILIZATION**
  Maintains a level TV over time
- **HARD TRAVEL-LIMIT STOPS**
  Manually set vertical and horizontal travel stops to assure your TV doesn't hit your mantel or wall
- **RB100 RECESS KIT**
  This accessory allows for flush-to-wall storage by allowing the lifting arm to fold into the wall when the TV is in its raised position.

MM720 Specifications	
TV Size	50"– 90" .
Max Load	up to 115 lbs.
Mount Weight	38 lbs.
Package Weight	42 lbs.
Package Dimensions	39" x 16" x 6.3"
UPC Code	860006443917
UMAP	$499

LIFETIME WARRANTY

For more on the MM720, check out the MantelMount Toolbox!

MantelMount.
mantelmount.com

* Limited Lifetime Warranty. Terms and conditions apply.

©2022 MantelMount, LLC. All rights reserved. MantelMount is a registered trademark of Manehu Product Alliance LLC.

REV 07-19-22